US010739107B2

(12) **United States Patent**
Drake

(10) **Patent No.: US 10,739,107 B2**
(45) **Date of Patent: Aug. 11, 2020**

(54) **FIREARM CHASSIS WITH INTEGRATED RAIL SYSTEM**

(71) Applicant: **Drake Associates, Inc.**, Vero Beach, FL (US)

(72) Inventor: **Christopher Drake**, Vero Beach, FL (US)

(73) Assignee: **DRAKE ASSOCIATES, INC.**, Vero Beach, FL (US)

(*) Notice: Subject to any disclaimer, the term of this patent is extended or adjusted under 35 U.S.C. 154(b) by 0 days.

(21) Appl. No.: **16/272,836**

(22) Filed: **Feb. 11, 2019**

(65) **Prior Publication Data**

US 2019/0178608 A1 Jun. 13, 2019

Related U.S. Application Data

(63) Continuation-in-part of application No. 15/873,468, filed on Jan. 17, 2018, now Pat. No. 10,203,178.

(60) Provisional application No. 62/446,898, filed on Jan. 17, 2017, provisional application No. 62/739,673, filed on Oct. 1, 2018.

(51) **Int. Cl.**

F41C 23/16	(2006.01)
F41A 3/66	(2006.01)
F41C 27/00	(2006.01)
F41C 9/08	(2006.01)
F41C 7/00	(2006.01)

(52) **U.S. Cl.**

CPC ***F41C 23/16*** (2013.01); ***F41A 3/66*** (2013.01); ***F41C 27/00*** (2013.01); *F41C 7/00* (2013.01); *F41C 9/08* (2013.01)

(58) **Field of Classification Search**

CPC F41C 23/16; F41A 3/66

USPC 42/71.01, 72, 75.01, 90

See application file for complete search history.

(56) **References Cited**

U.S. PATENT DOCUMENTS

2,339,331	A *	1/1944	Grigg	F41A 21/485 42/75.01
2,717,465	A *	9/1955	Clark, Jr.	F41C 23/00 42/75.01
3,011,283	A	12/1961	Lunn	
3,340,641	A *	9/1967	Recker	F41C 27/22 42/97
5,711,102	A *	1/1998	Plaster	F41C 23/00 42/71.01
5,873,189	A	2/1999	Menke	
6,637,142	B1 *	10/2003	Reynolds	F41A 21/485 42/1.06
6,839,998	B1	1/2005	Armstrong	
7,428,795	B2	9/2008	Herring	

(Continued)

FOREIGN PATENT DOCUMENTS

WO	2016025534	A1	2/2016

OTHER PUBLICATIONS

https://geissele.com/super-modular-rail-mk8-m-lokr.html; retrieved Feb. 12, 2020.

Primary Examiner — Reginald S Tillman, Jr.

(74) *Attorney, Agent, or Firm* — Carter, Deluca & Farrell LLP

(57) **ABSTRACT**

A chassis for a firearm includes a lower receiver and a lower forend that are monolithically formed with one another. The lower receiver defines a trigger well that is configured to receive an action. The lower forend extends distally from the lower receiver and defines a channel that is configured to receive a barrel.

20 Claims, 14 Drawing Sheets

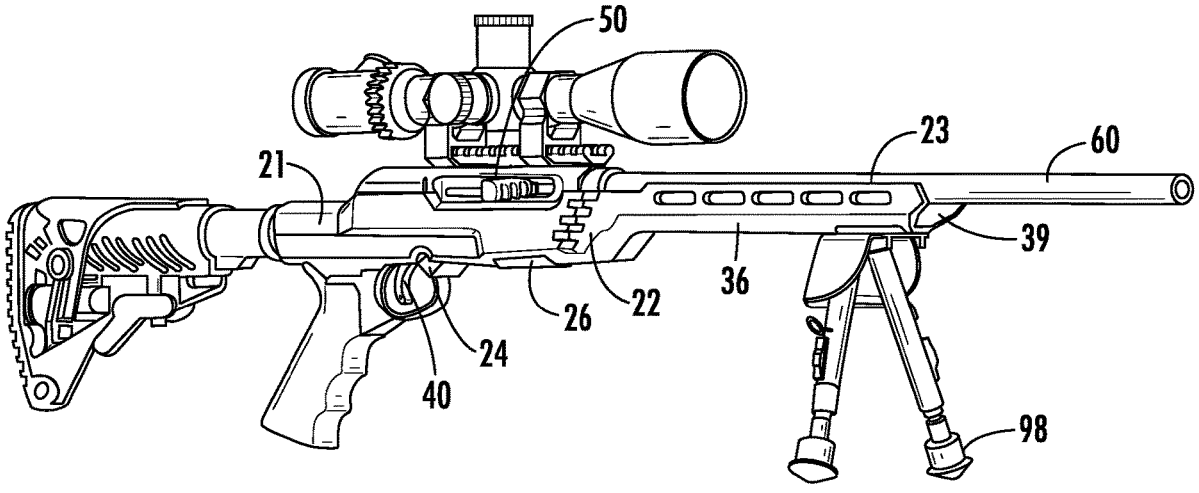

(56) **References Cited**

U.S. PATENT DOCUMENTS

7,926,217	B2	4/2011	McCann	
8,234,808	B2	8/2012	Lewis et al.	
9,285,178	B2 *	3/2016	Sellars	F41A 21/485
9,534,859	B2	1/2017	Battaglia et al.	
9,726,444	B1 *	8/2017	Sisk	F41A 3/66
9,766,025	B1	9/2017	Rood	
9,851,175	B2 *	12/2017	Leasure	F41C 23/16
10,203,178	B2	2/2019	Drake	
2006/0272193	A1	12/2006	Zedrosser	
2007/0180750	A1	8/2007	Al-Mulla	
2008/0244951	A1	10/2008	Picard	
2009/0211140	A1 *	8/2009	Rolfe	F41C 23/04 42/71.01
2010/0162608	A1	7/2010	McCann	
2011/0283582	A1 *	11/2011	Hunter	F41A 19/10 42/69.02
2015/0192384	A1	7/2015	Ballard	
2016/0313087	A1	10/2016	Leasure	
2017/0219310	A1	8/2017	Jones	

* cited by examiner

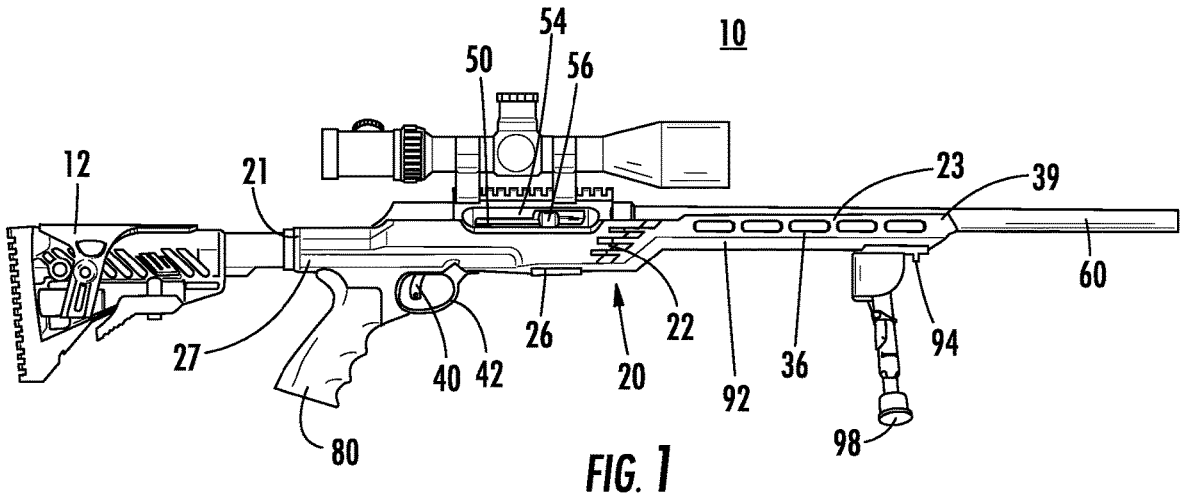

FIG. 1

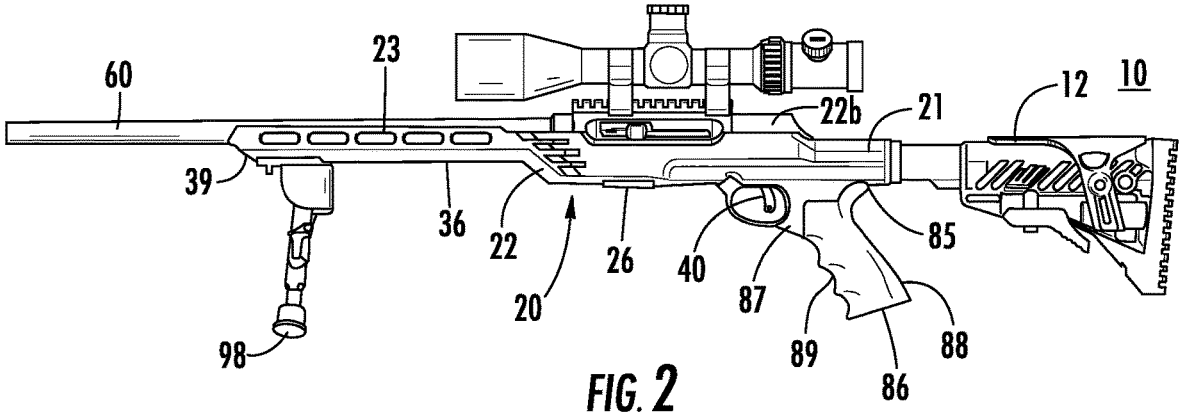

FIG. 2

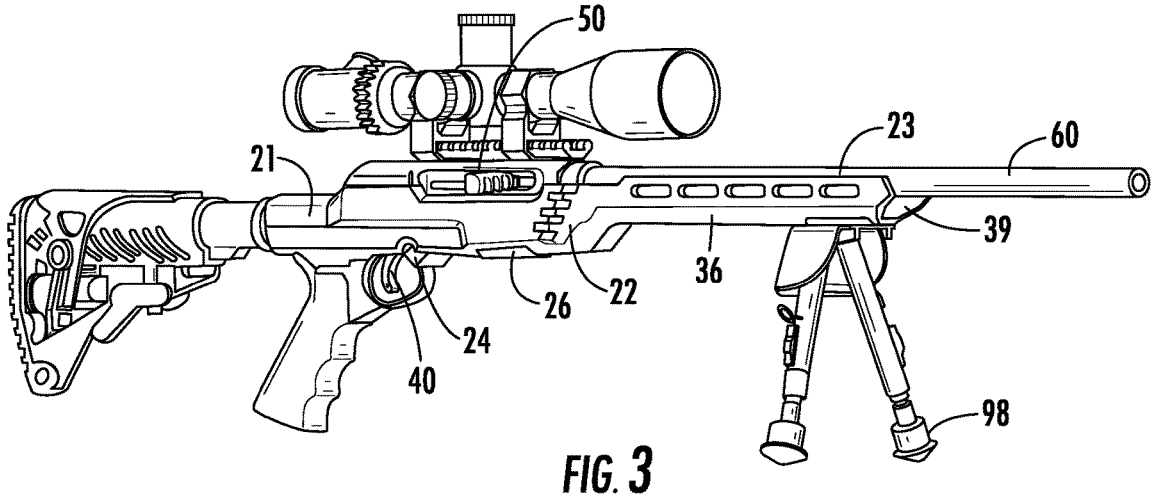

FIG. 3

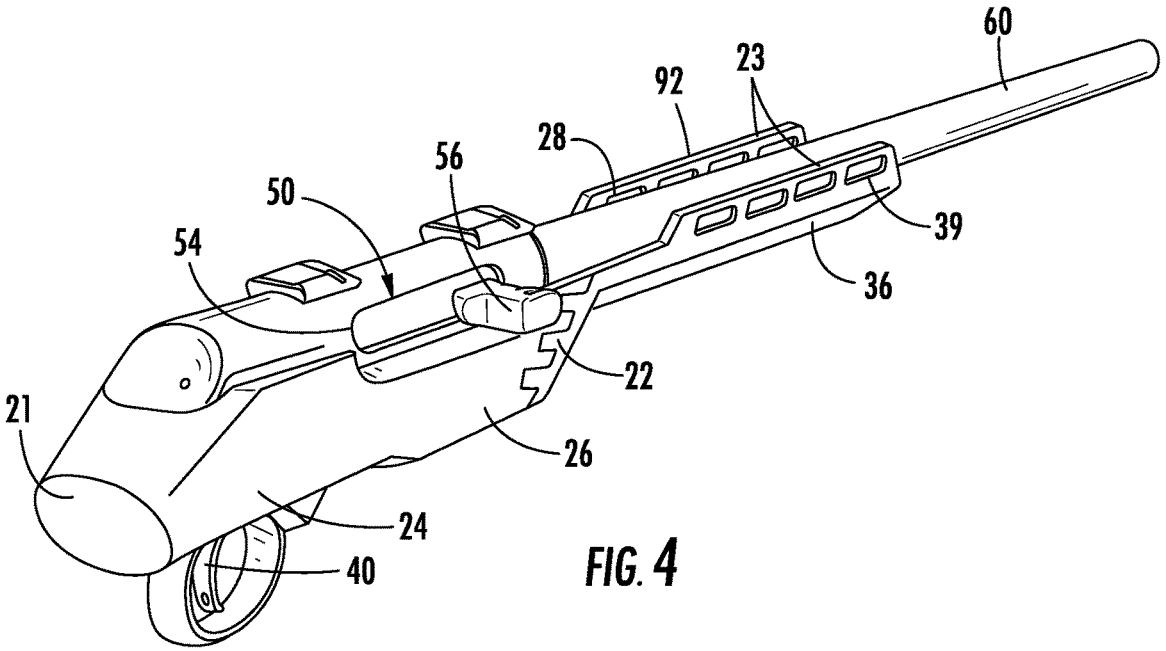

FIG. 4

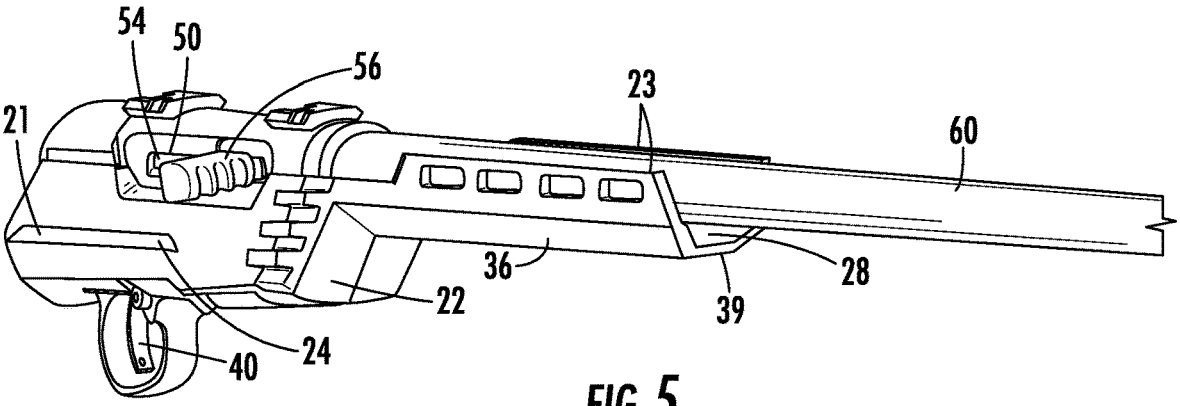

FIG. 5

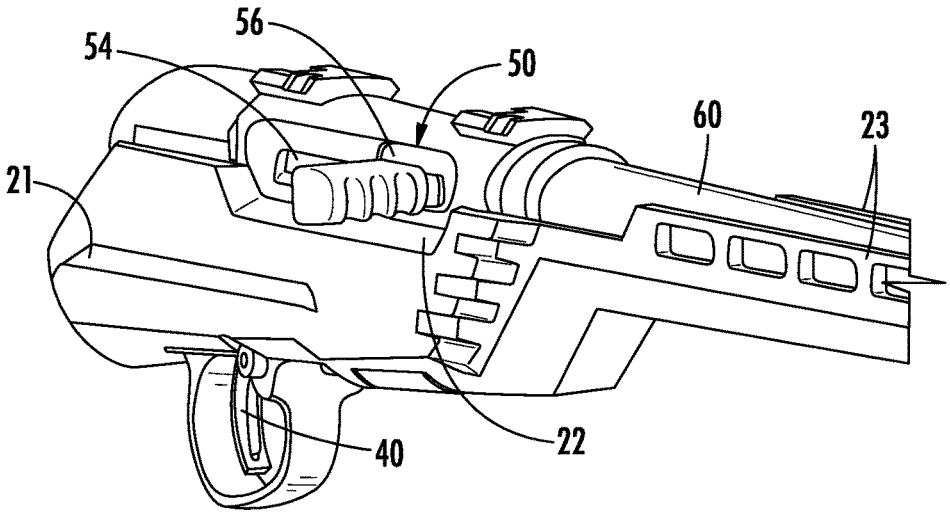

FIG. 6

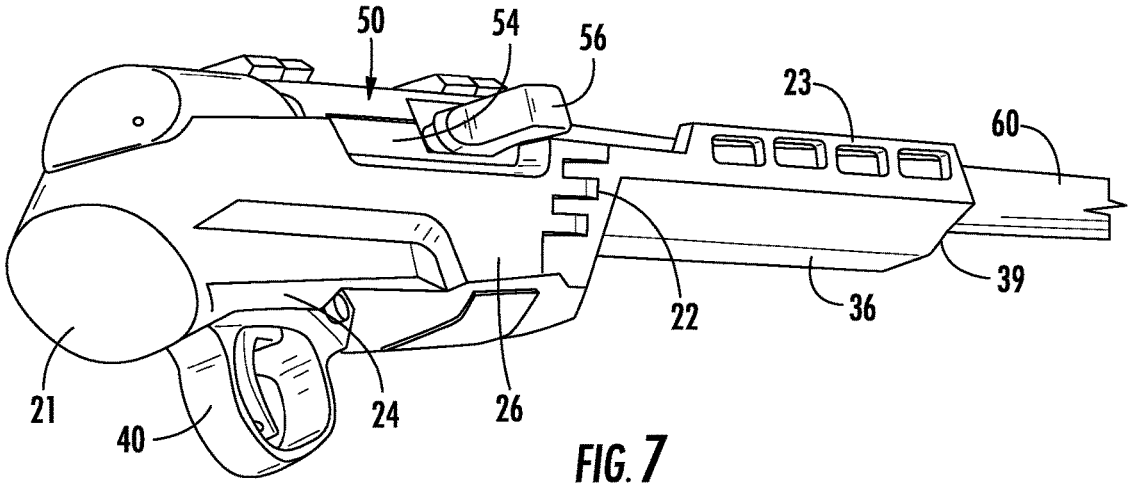
50
54
56
23
60
39
36
22
21
40
24
26

FIG. 7

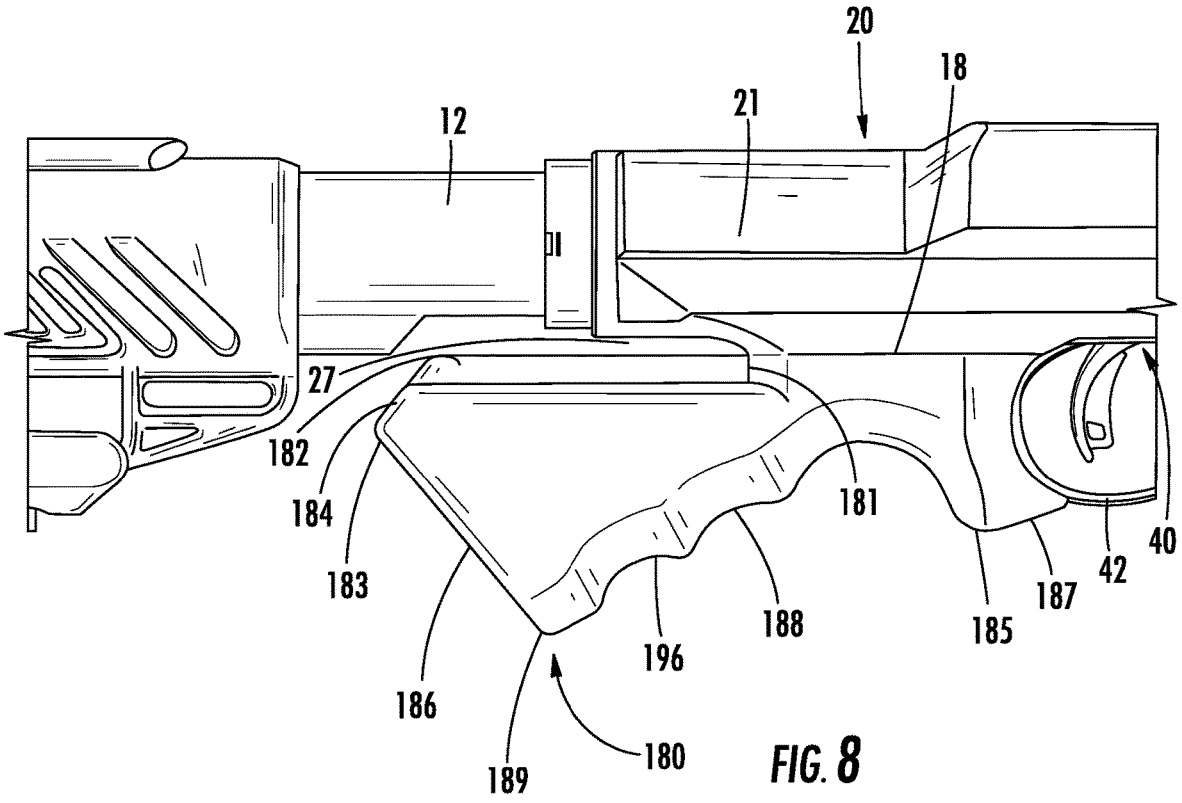
20
18
21
12
27
182
184
183
186
189
180
196
188
181
185
187
42
40

FIG. 8

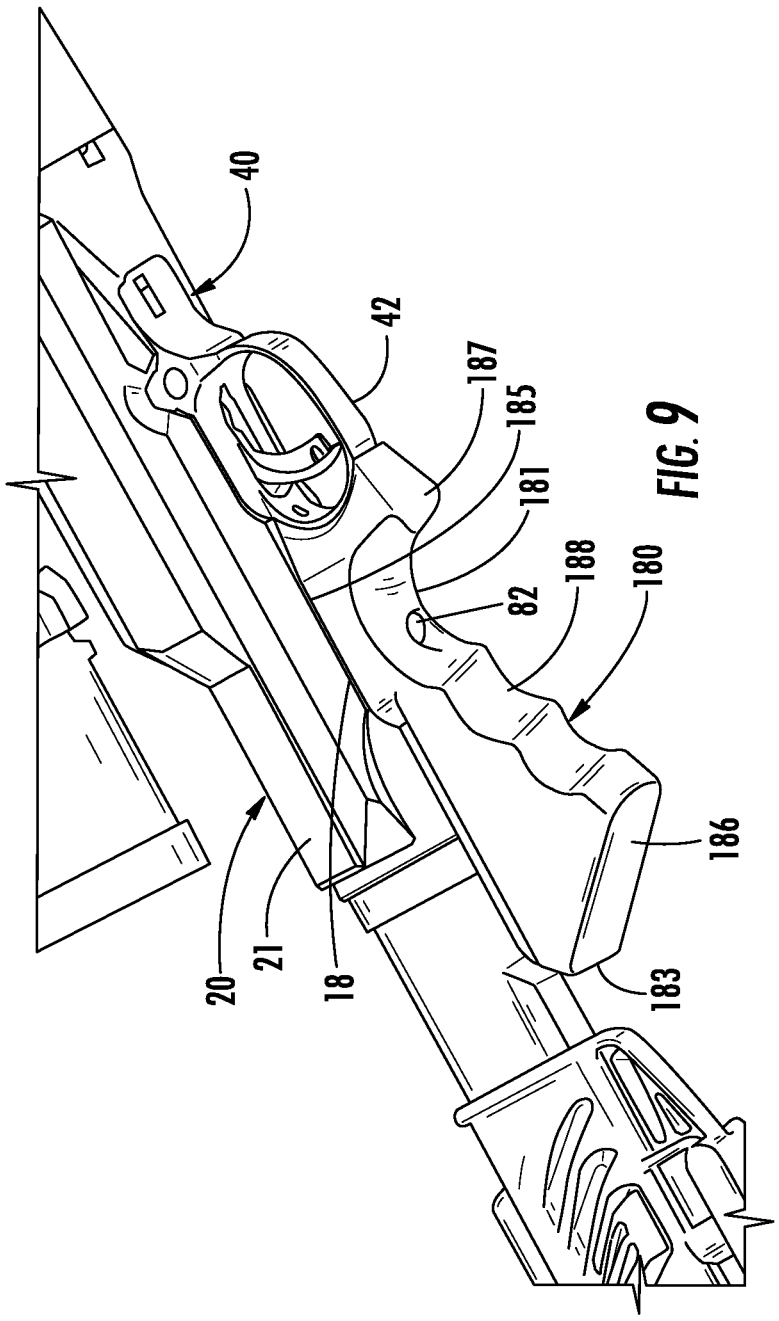

FIG. 9

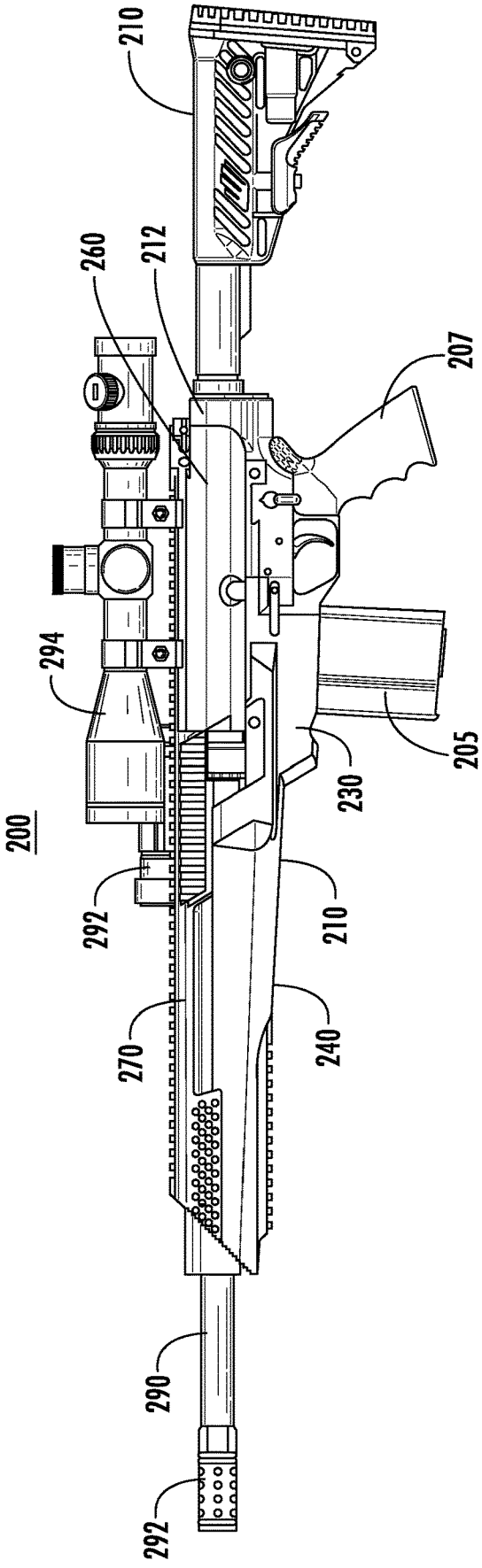

FIG. 10

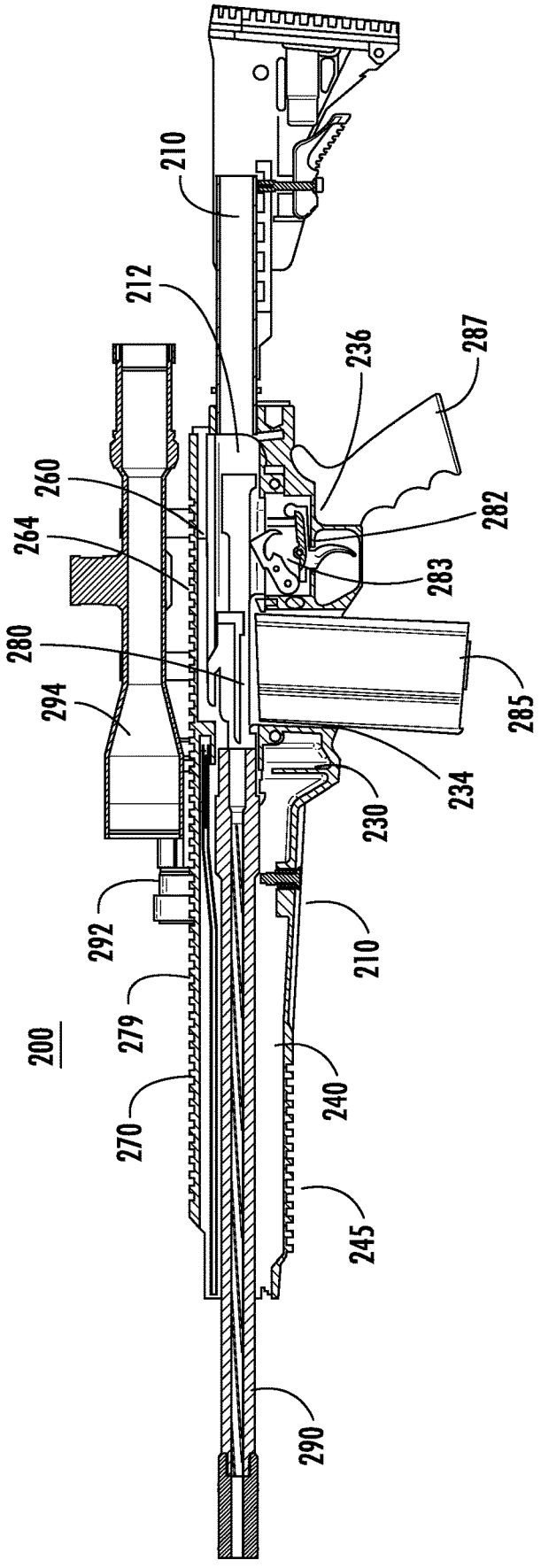
210
212
236
287
260
264
282
283
280
285
294
234
230
292
210
279
200
240
270
245
290

FIG. 11

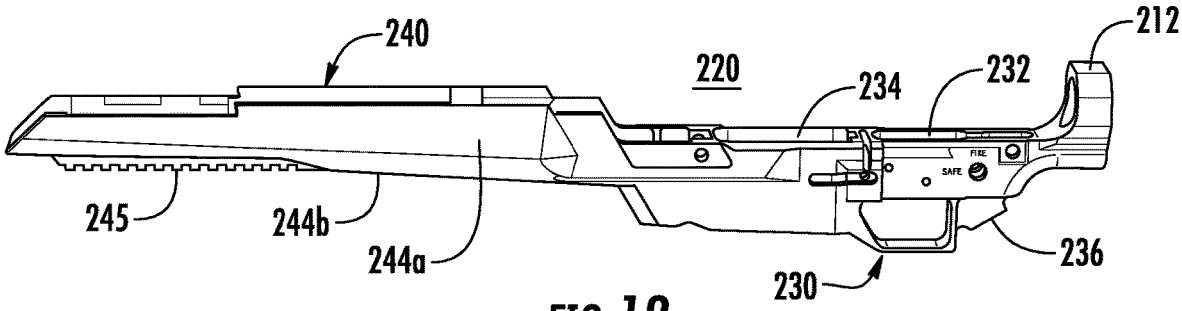
240
220
234
232
212
245
244b
244a
236
230
FIRE
SAFE

FIG. 12

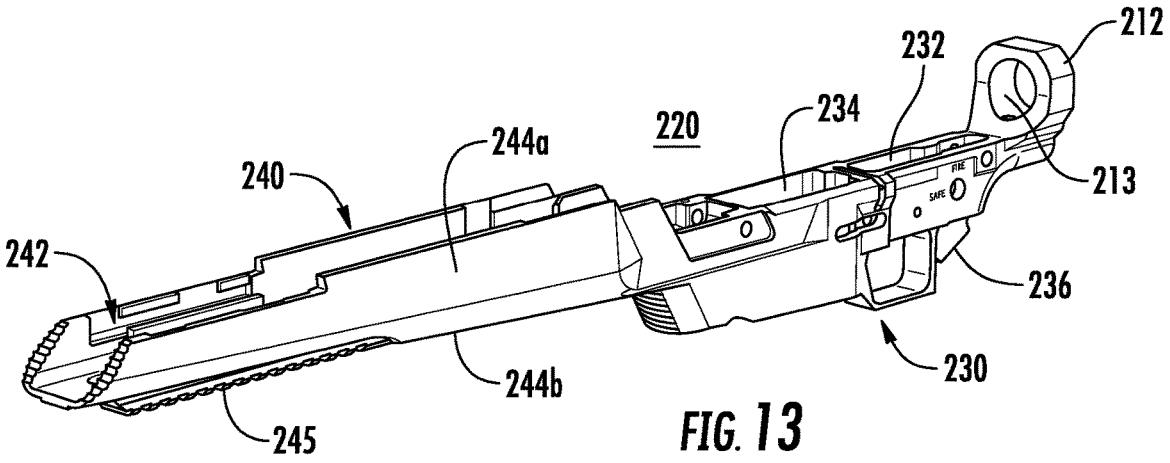
212
232
234
220
244a
240
213
242
236
230
244b
245
FIRE
SAFE

FIG. 13

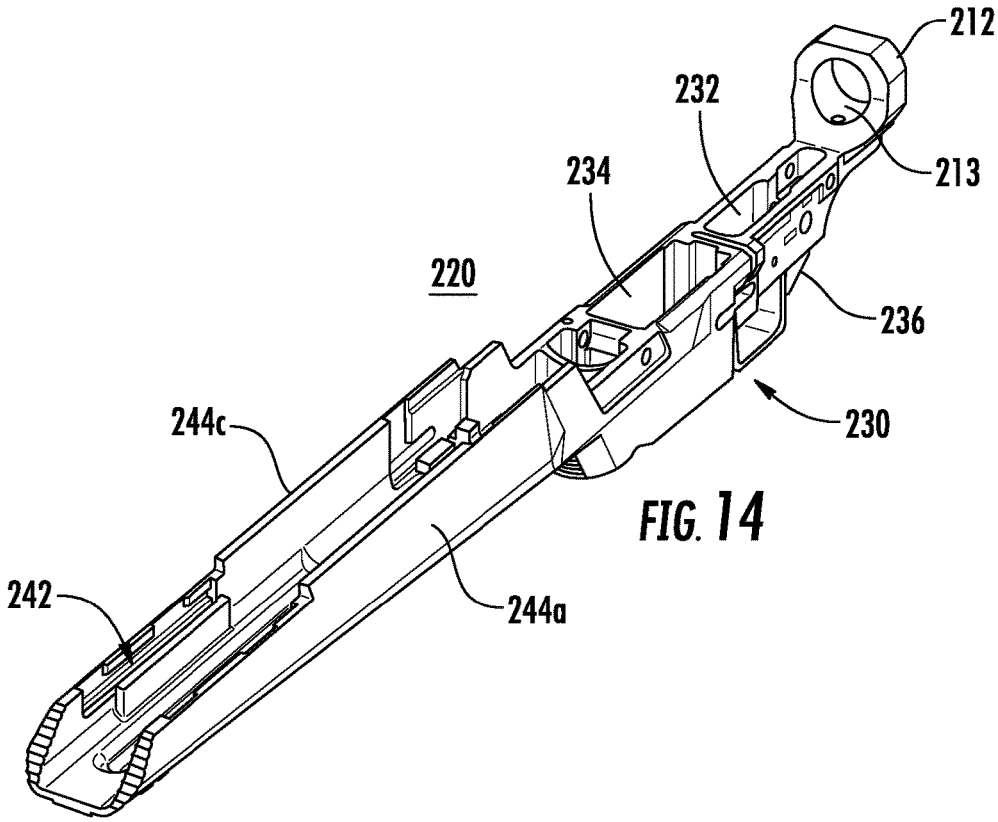
212
232
213
234
220
236
230
244c
242
244a

FIG. 14

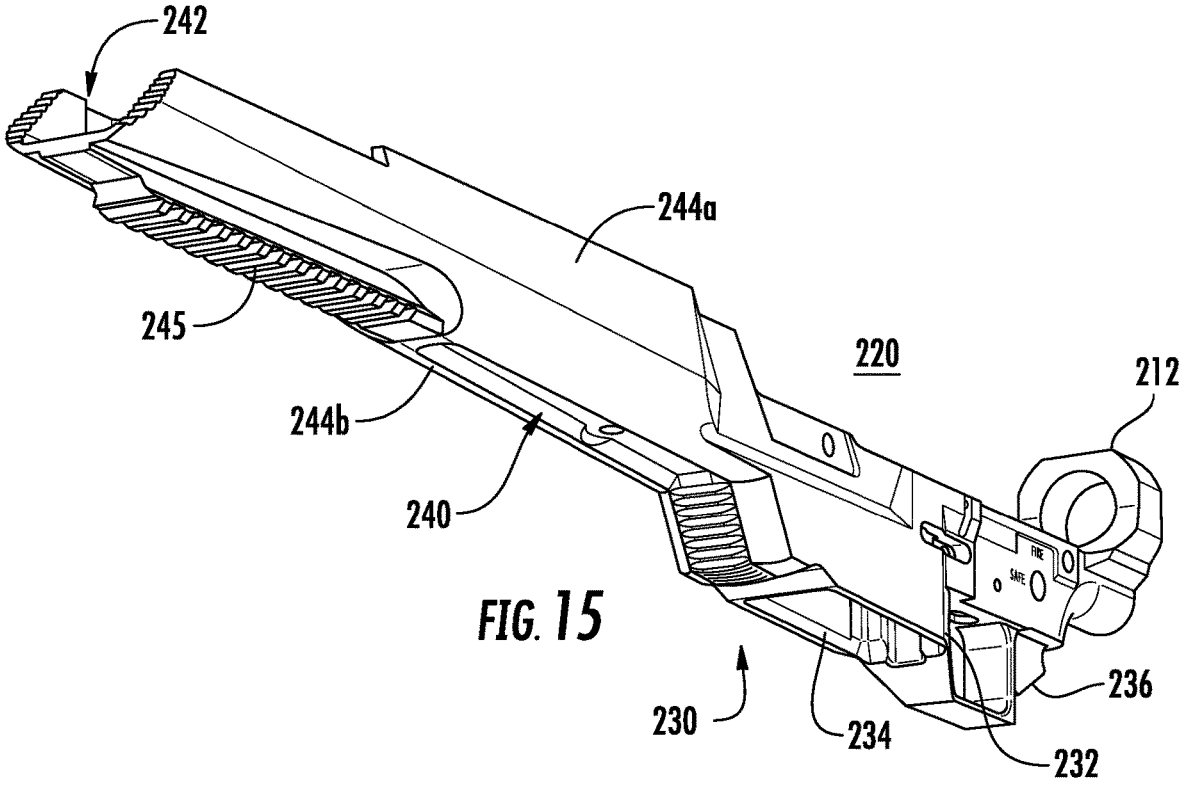
242
244a
245
220
212
244b
240
FIRE
SAFE
236
230
234
232

FIG. 15

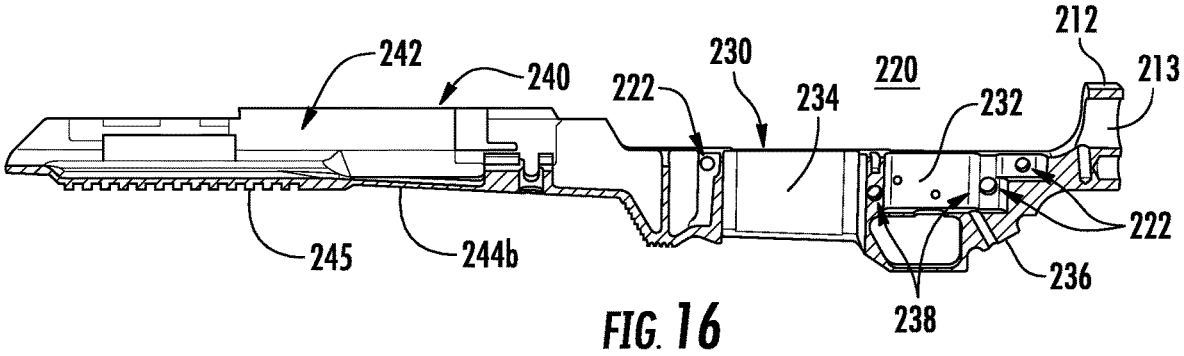

FIG. 16

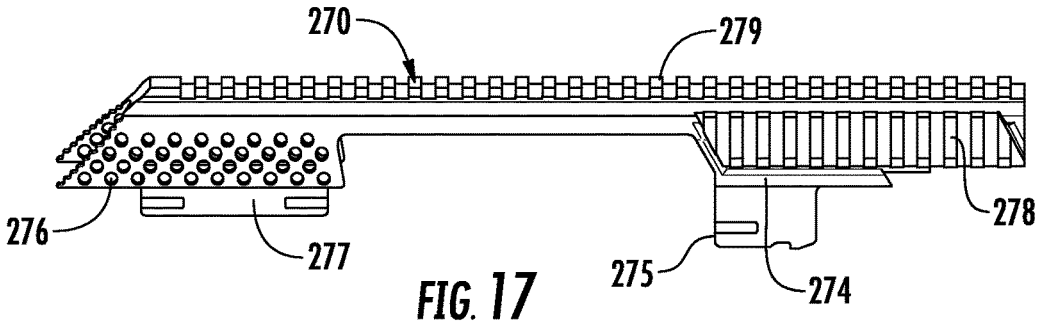

FIG. 17

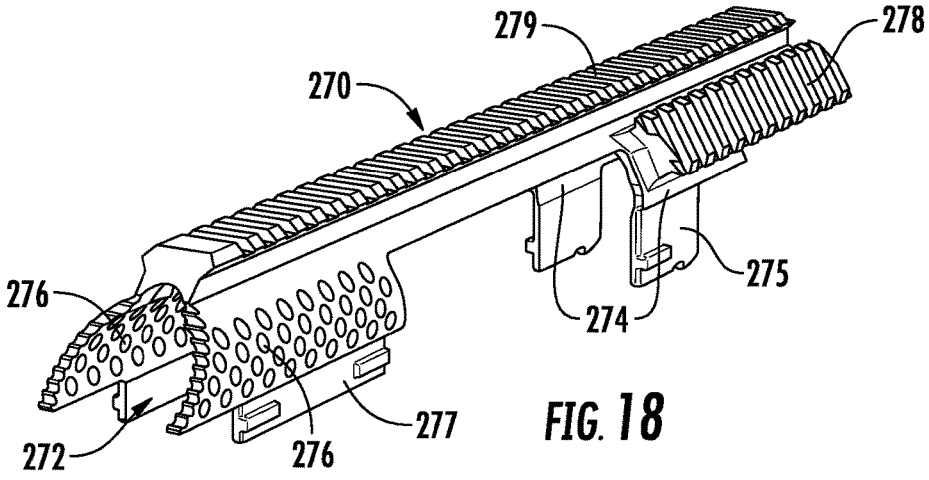

FIG. 18

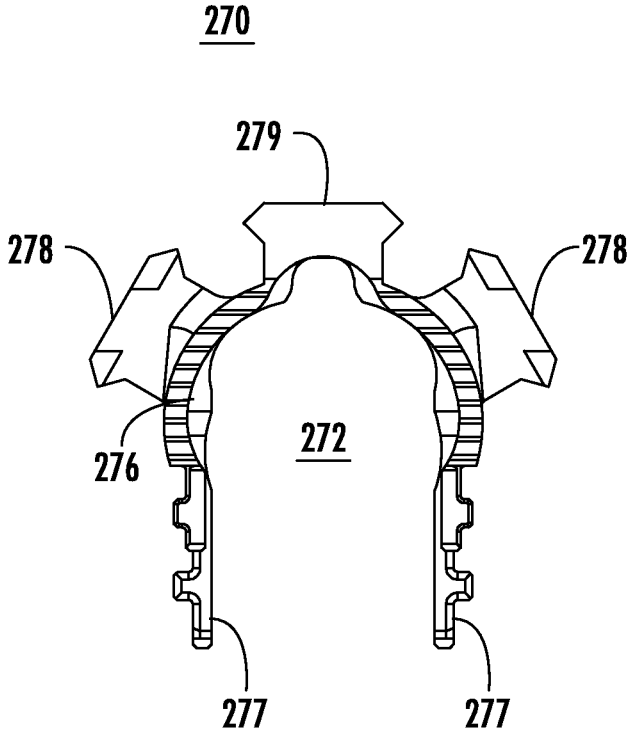

FIG. 19

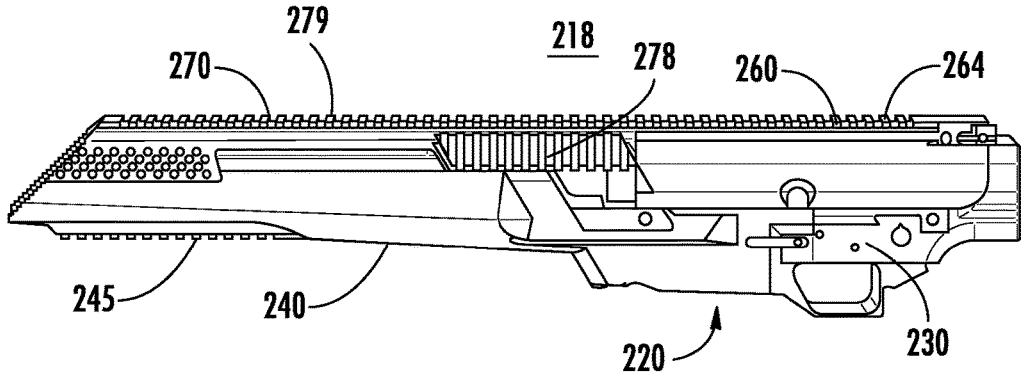

FIG. 20

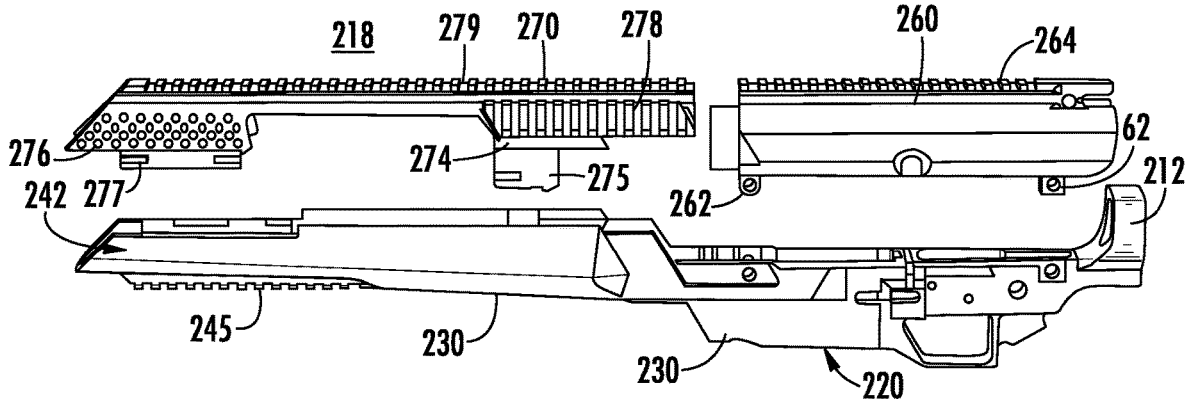

FIG. 21

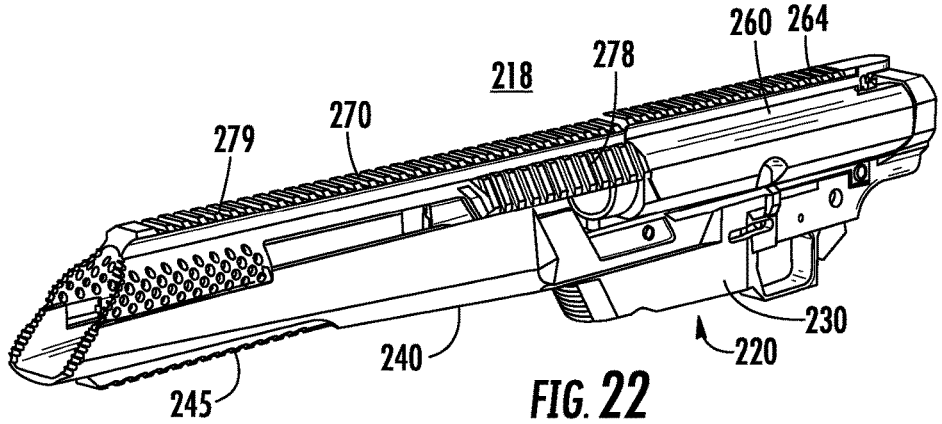

FIG. 22

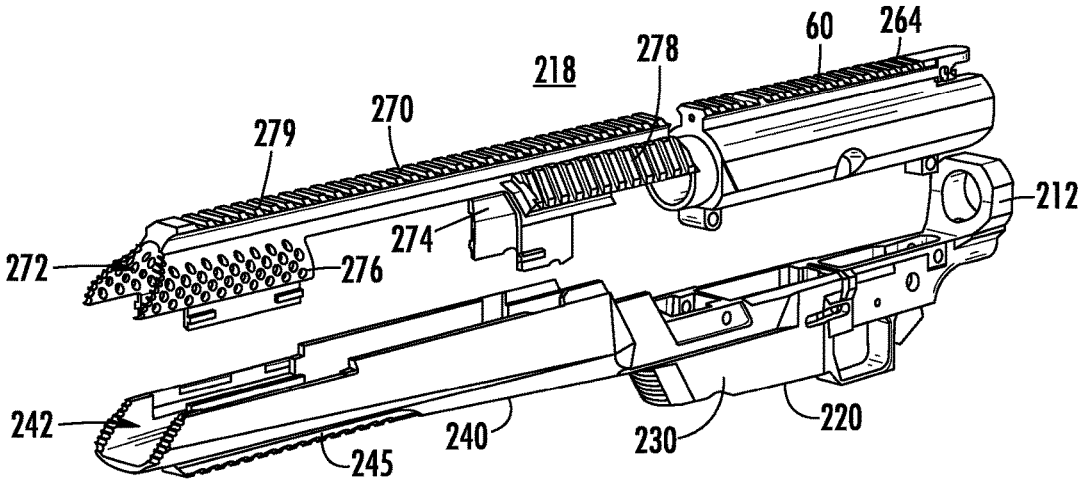
60
264
278
218
270
279
212
274
272
276
242
240
230
220
245

FIG. 23

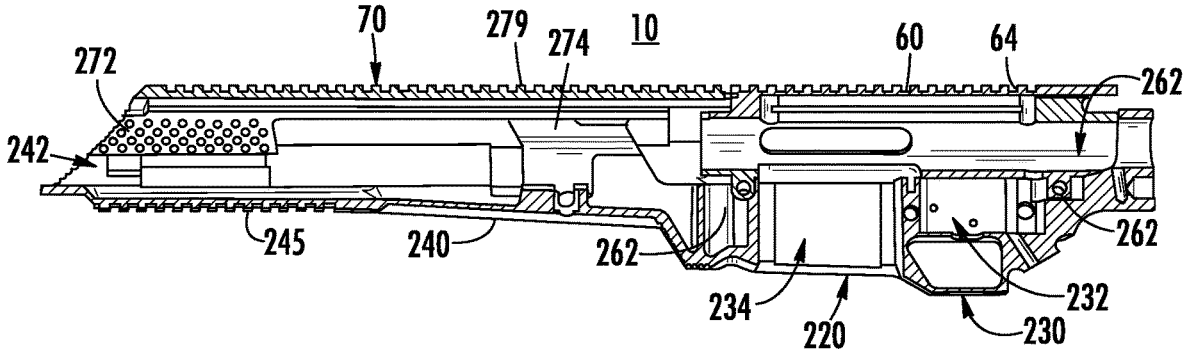
70
279
274
10
60
64
272
262
242
245
240
262
262
234
232
220
230

FIG. 24

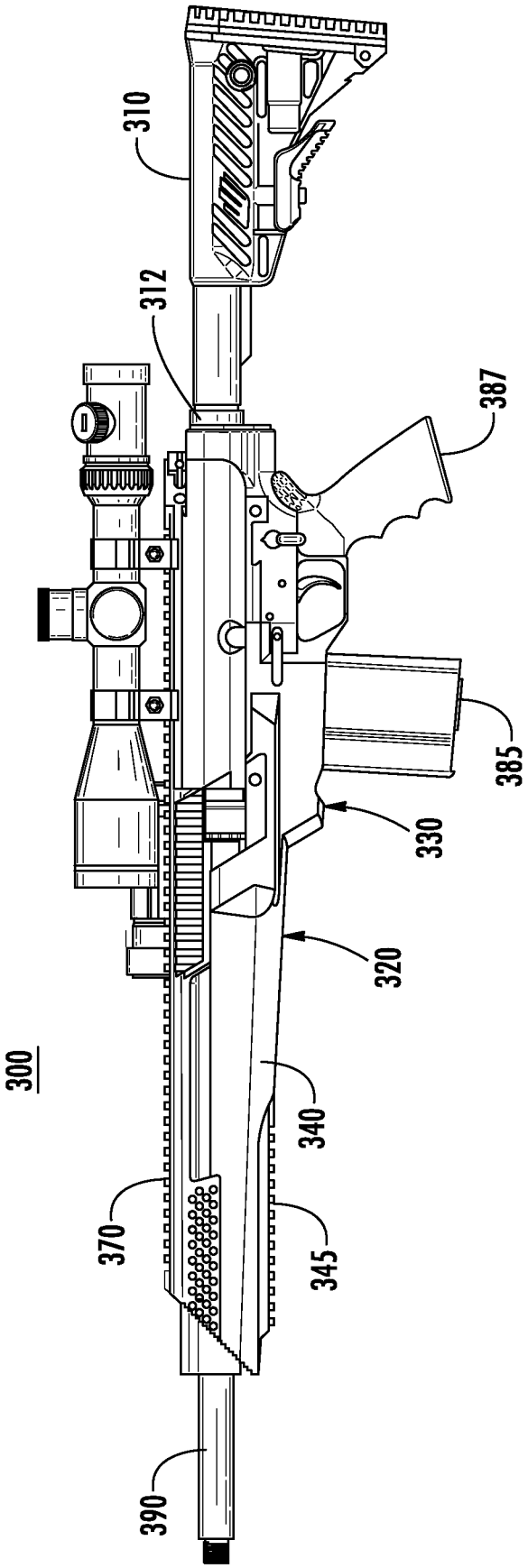

FIG. 25

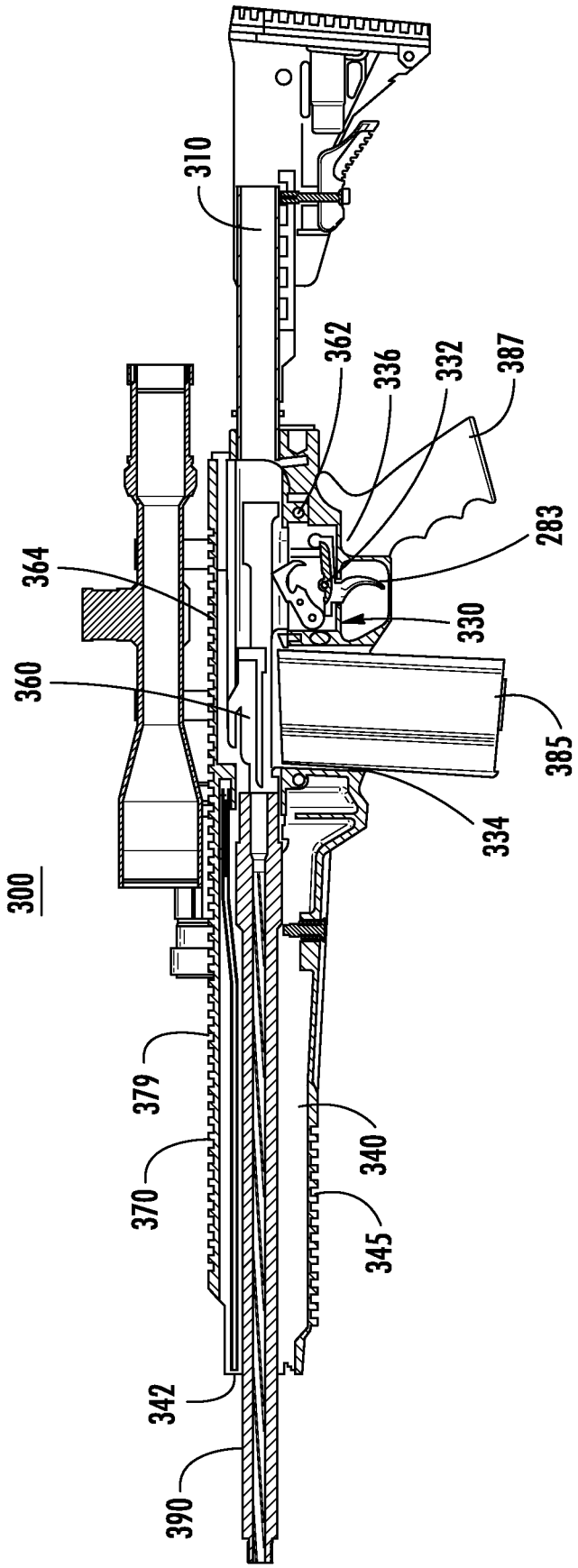
310
362
336
332
387
283
364
330
360
385
334
300
379
340
370
345
342
390

FIG. 26

FIREARM CHASSIS WITH INTEGRATED RAIL SYSTEM

CROSS-REFERENCE TO RELATED APPLICATIONS

This application claims the benefit of, and priority to, U.S. Provisional Patent Application No. 62/739,673, filed Oct. 1, 2018. In addition, this application is a continuation-in-part of U.S. patent application Ser. No. 15/873,468, filed Jul. 17, 2018, which claims the benefit of, and priority to, U.S. Provisional Patent Application No. 62/446,898, filed Jan. 17, 2017. The entire contents of each of the above applications are hereby incorporated by reference.

BACKGROUND

1. Technical Field

The present disclosure relates to firearms and, more specifically, to a tactical firearm system that is monolithically formed from the forearm to the stock mount.

2. Discussion of Related Art

The modern firearm has evolved to utilize a great deal of accessories in response to user demand to address an abundance of unique situations. Modular rifle systems address this demand by allowing manufacturers to produce standard components for a rifle which allows dealers and end users to customize the rifle system. The major components of a modular rifle system are a stock, a chassis, a barrel, and an action. The chassis is the central component of the modular rifle system and may be integrally formed with the stock. The barrel and action each mount to the chassis.

For some situations, precision and accuracy may be required of a modular rifle system. Thus, there is a continuing need for components for modular rifle systems that increase precision and/or accuracy of the completed rifle system.

Modular rifle systems may also include a rail interface system that is secured to the chassis. The rail interface system allows components that require precision, such as optics, to be secured to the chassis. Additionally or alternatively, components that provide stability to the modular rifle system can be secured to the chassis by the rail interface system. Thus, there is a need for rail interface systems that provide increased precision and/or stability to the modular rifle system.

SUMMARY

In an aspect of the present disclosure, a chassis for a firearm includes sidewalls, a forearm, and a first rail portion. The sidewalls define a trigger well and a magazine well therebetween. The sidewalls also define a proximal portion of a channel. The forearm is monolithically formed with the chassis and extends distally from the magazine well. The forearm defines a distal portion of the channel which is configured to receive a barrel of a firearm. The first rail portion extends from the forearm adjacent the channel on a first side of the chassis. The first rail portion defines part of a rail system that is configured to securely mount an accessory directly to the chassis. The first rail portion may be monolithically formed with the forearm.

In aspect, the forearm includes a second rail portion that extends from the forearm adjacent the channel on a second side of the chassis that is opposite the first side of the chassis such that the channel passes between the first and second rail portions. The first and second rail portions may extend from the forearm such that an upper surface of each of the first and second rail portions is configured to extend above a centerline of a barrel received within the channel. The sidewalls may have an upper surface that is configured to be positioned below a centerline of a barrel received within the channel. The forearm may include a lower surface that defines a lower rail system that is configured to securely mount an accessory directly to the chassis.

In some aspects, the chassis includes a proximal portion that extends proximally from the trigger well. The proximal portion may be configured to receive a stock. The proximal portion may include a fastener that is configured to secure a grip to a lower surface thereof. The proximal portion may be integrally formed with the stock. The stock may be a fixed stock, a folding stock, and/or an adjustable stock.

In another aspect of the present disclosure, a grip for a firearm includes a distal strut, a connector, and a hand grip. The distal strut is configured and dimensioned to flushingly receive a trigger guard of a firearm. The connector extends proximally from the distal strut and is configured to releasably secure to a proximal portion of a chassis. The hand grip extends proximally from the connector. The hand grip has an upper surface that is configured to be spaced apart from and oppose the proximal portion of the chassis and a stock. The hand grip has a lower surface that extends from the connector. A plane defined by the lower surface forms an acute angle with a plane defined by the upper surface. The lower surface is configured to receive non-trigger fingers of a hand.

In aspects, the connector includes a connecting surface having an opening that is configured to receive a fastener therethrough to secure the grip to the chassis.

In another aspect of the present disclosure, a method includes securing a barrel in a channel that is defined by a chassis and securing a first accessory to a first rail system of the chassis. The chassis includes sidewalls that define a proximal portion of the channel and a forearm that defines a distal portion of the channel. The first rail system extends from the forearm on a first side of the channel such that an upper surface of the first rail system is positioned above a centerline of the barrel when the barrel is received within the channel. The first rail system being monolithically formed with the forearm.

In aspects, securing the first accessory includes securing the first accessory to a second rail system of the chassis. The second rail system may extend from the forearm on a second side of the channel such that an upper surface of the second rail system is positioned above the centerline of the barrel when the barrel is received within the channel and the barrel is positioned between the first and second rail portions. The second rail system may be monolithically formed with the forearm.

In some aspects, the method includes securing a second accessory to a lower rail system of the chassis. The lower rail system may be defined in a lower surface of the forearm opposite of the channel.

In certain aspects, the method includes positioning a trigger mechanism in a trigger well defined by the sidewalls and securing a ridgeline grip to a proximal portion of the chassis proximal of the trigger well such that a distal strut of the ridgeline grip receives a portion of a trigger guard of the trigger mechanism. The trigger mechanism also has a trigger which may be partially surrounded by the trigger guard. The ridgeline grip may have a connector that extends proximally from the distal strut and a hand grip that extends proximally

from the connector. The hand grip has an upper surface that is spaced apart from and opposed to a proximal portion of the chassis and a lower surface that extends from the connector. The plane is defined by the lower surface that forms an acute angle with a plane defined by the upper surface. The lower surface is configured to receive non-trigger fingers of a hand.

In particular aspects, securing the ridgeline grip includes passing a fastener through the connector of the ridgeline grip and into the proximal portion of the chassis. The method may include securing a stock to the proximal portion of the chassis such that the upper surface of the hand grip opposes a portion of the stock.

In another aspect of the present disclosure, a chassis for a firearm includes a lower receiver and a lower forend that are monolithically formed with one another. The lower receiver defines a trigger well that is configured to receive an action. The lower forend extends distally from the lower receiver and defines a channel that is configured to receive a barrel.

In aspects, the chassis includes a lower rail that is secured to a lower surface of the lower forend. The lower surface may be opposite the channel. The lower rail may be monolithically formed with the lower forend. The lower rail may extend longitudinally along the lower surface of the lower forend and is configured to secure an accessory to the lower forend in a plurality of longitudinal positions.

In some aspects, the chassis includes an upper forend secured to the lower forend. A portion of the channel may be defined between the upper and lower forends. The chassis may include an upper rail disposed on an upper surface of the upper forend opposite the channel. The upper rail may be monolithically formed with the upper forend. The upper forend may be monolithically formed with the lower forend.

In certain aspects, the chassis includes a stock mount that is secured to the lower receiver. The stock mount may be configured to secure a stock to the lower receiver. The stock mount may be monolithically formed with the lower receiver.

In particular aspects, the chassis includes an upper carriage that is secured to the lower receiver. The upper carriage may be monolithically formed with the upper forend.

In aspects, the lower receiver defines a magazine well that is configured to receive a magazine containing one or more cartridges suitable for the action. The lower forend may extend distally from the magazine well.

In another aspect of the present disclosure, a firearm includes a lower chassis, an action, and a barrel. The lower chassis includes a lower receiver and a lower forend that is monolithically formed with the lower receiver. The lower receiver includes a trigger well. The lower forend extends distally from the lower receiver and defines a channel. The action is received within the trigger well and the barrel is received within the channel.

In aspects, the firearm includes a lower rail monolithically formed on a lower surface of the lower forend with the lower surface being opposite the channel. The fire arm may include an upper forend that is secured to the lower forend with a portion of the channel defined between the upper and lower forends.

In some aspects, the firearm includes a stock that is secured to and extends proximally from the lower chassis. The firearm may include an upper carriage that is secured to the lower receiver.

In another aspect of the present disclosure, a firearm includes a lower chassis, an upper forend, an upper carriage, a stock, an action, and a barrel. The lower receiver defines a trigger well and a magazine well. The lower forend extends distally from and is monolithically formed with the lower receiver. The upper forend is secured to the lower forend with a channel being defined between the upper and lower forends. The upper carriage is secured to the lower receiver of the trigger well to define a chamber. The stock is secured to and extends proximally from the lower receiver. The action is received within the trigger well. The barrel is received within the channel.

Further, to the extent consistent, any of the aspects described herein may be used in conjunction with any or all of the other aspects described herein.

BRIEF DESCRIPTION OF THE DRAWINGS

Various aspects of the present disclosure are described hereinbelow with reference to the drawings, which are incorporated in and constitute a part of this specification, wherein:

FIG. **1** is a right side view of a firearm provided in accordance with the present disclosure including a barrel, an action, and a tactical chassis system having an integrated rail system;

FIG. **2** is a left side view of the firearm in FIG. **1**;

FIG. **3** is a perspective view of the firearm in FIG. **1**;

FIG. **4** is an upper back, side perspective view of a portion of the firearm of FIG. **1** illustrating the tactical chassis system, barrel, and action;

FIG. **5** is a front, side perspective view of the portion of the firearm of FIG. **4**;

FIG. **6** is an enlarged front, side perspective view of the portion of the firearm of FIG. **4**;

FIG. **7** is a lower back,-side perspective view of the portion of the firearm of FIG. **4**;

FIG. **8** is a side view of a portion of the firearm of FIG. **1** with a ridgeline grip provided in accordance with the present disclosure;

FIG. **9** is a lower perspective view of the portion of the firearm of FIG. **8**;

FIG. **10** is a side view of another firearm provided in accordance with the present disclosure;

FIG. **11** is a side cross-sectional view of the firearm of FIG. **10**;

FIG. **12** is a side view of a lower chassis of the firearm of FIG. **10**;

FIG. **13** is a perspective view of the lower chassis of FIG. **12**;

FIG. **14** is a top perspective view of the lower chassis of FIG. **12**;

FIG. **15** is a bottom perspective view of the lower chassis of FIG. **12**;

FIG. **16** is a side cross-sectional view of the lower chassis of FIG. **12**;

FIG. **17** is a side view of an upper forend of the firearm of FIG. **10**;

FIG. **18** is a perspective view of the upper forend of FIG. **17**;

FIG. **19** is a front view of the upper forend of FIG. **17**;

FIG. **20** is a side view of a body of the firearm of FIG. **10** including the lower chassis, the upper forend, and an upper carrier;

FIG. **21** is a side view, with parts separated, of the body of FIG. **20**;

FIG. **22** is a perspective view of the body of FIG. **20**;

FIG. **23** is a perspective view, with parts separated, of the body of FIG. **20**;

FIG. **24** is a side cross-sectional view of the body of FIG. **20**;

FIG. **25** is a side view of another firearm provided in accordance with the present disclosure; and

FIG. **26** is a side cross-sectional view of the firearm of FIG. **25**.

DETAILED DESCRIPTION

Embodiments of the present disclosure are now described in detail with reference to the drawings in which like reference numerals designate identical or corresponding elements in each of the several views. Throughout this description, the term "proximal" refers to the portion of the device or component thereof that is closer to a butt of the firearm and the term "distal" refers to the portion of the device or component thereof that is closer to a muzzle or end of a barrel of the firearm.

A modular rifle system including a tactical chassis is described herein. The tactical chassis may include an integrated rail system. The integrated rail system may include a rail interface on the right, left, lower, and/or top surface of the chassis. The tactical chassis may be used with a variety of grips including a pistol grip or a ridgeline grip. The modular rifle system may include a semi-automatic action.

Referring to FIGS. **1-3**, a modular rifle system **10** is provided in accordance with the present disclosure and includes a stock **12**, a tactical chassis **20**, a trigger mechanism **40**, an action **50**, a barrel **60**, and a magazine (not explicitly shown). As shown, the action **50** is a .17 HMR semi-automatic action; however, the action **50** may be a variety of actions including, but not limited to, a .17 HRM action, a .22 LR action, a .22 Magnum action, a .308 action, a .410 action, a rimfire action, a short or long bolt action, a short or long semi-automatic action, a short or long action shotgun action, or a muzzle loader action.

The tactical chassis **20** includes sidewalls **22** that extend from a proximal portion **21** to a distal portion **39**. The tactical chassis **20** defines a trigger well **24** (FIGS. **4** and **5**) and a magazine well **26** and includes a forearm **36** that extends from the magazine well **26** to the distal portion **39** of the tactical chassis **20**. The trigger well **24** receives the trigger mechanism **40** and the magazine well **26** receives a magazine. The magazine may be releasably secured within the magazine well or may be an internal magazine received within the forearm **36** of the tactical chassis **20**.

The stock **12** is secured to the proximal portion **21** of the tactical chassis **20**. The stock **12** may be integrally formed with or releasably secured to the proximal portion **21** of the tactical chassis **20**. As shown, the stock **12** is an adjustable stock; however, the stock **12** may be a fixed stock, a folding stock, or an adjustable folding stock.

Referring now to FIG. **4**, the sidewalls **22** of the tactical chassis **20** defines a proximal portion of a channel **28** above the trigger well **24** and the magazine well **26**. The channel **28** receives the action **50** and the barrel **60**. The proximal portion of the channel **28** cradles about 135° of the action **50** and the barrel **60** such that upper surfaces of the sidewalls **22** are positioned below a centerline of the action **50** and the barrel **60** adjacent the action **50** and the barrel **60**.

With reference to FIGS. **4-6**, the action **50** includes a slide **54** and defines a chamber **52** (FIG. **6**). The slide **54** is slidable within the action **50** between a first configuration (FIG. **6**) in which the slide **54** is in an open position to provide access to the chamber **52** and a second configuration (FIG. **4**) in which the slide **54** is locked in a closed position such that the chamber **52** of the action **50** is closed. In the closed position, the chamber **52** is closed and the trigger mechanism **40** is actuatable to fire a cartridge (not shown) positioned within the chamber **52**. The slide **54** includes a slide arm **56** that extends from and is secured to the slide **54**. The slide arm **56** is engagable by an end user to manually move the slide **54** between the closed position and the open position. The slide **54** may be biased towards the closed position. It will be appreciated that when the action **50** is a semi-automatic action, the action **50** will transition the slide **54** from the second configuration to the first configuration upon firing of the cartridge and the bias of the slide **54** will return the slide **54** to the second configuration such that the action **50** is prepared to fire a fresh cartridge loaded into the chamber **52**.

Referring now to FIGS. **1-7**, the tactical chassis **20** is configured to receive a right-handed action **50**; however, it is contemplated that the chassis **20** may receive a left-handed or ambidextrous action. As shown, the action **50** is a right-handed action **50** allowing the chamber **52**, the slide **54**, and the slide arm **56** to be accessed from the right side of the modular rifle system **10**. In the closed position, the slide arm **56** is positioned at a distal end of a slide rail **58** within the action **50** as shown in FIG. **6**. To move the slide **54** to the open position, the slide arm **56** is slid proximally along the slide rail **58**. When the slide arm **56** reaches a proximal end of the slide rail **58**, the action **50** is in a fully open position. As the slide **54** slides to the fully open position, a cartridge (not shown) may be ejected from the chamber **52**. In the right-handed configuration, the cartridge is ejected from the right side of the chamber **52**. As the slide **54** reaches the fully open position, a lower portion of the chamber **54** is opened to allow a new cartridge from the magazine (not shown) to enter the chamber **52**. Alternatively, a new cartridge may be placed directly into the chamber **52** when the slide **54** is in the open position.

When a new cartridge is within the chamber **52**, the slide arm **56** is engaged to slide the slide **54** distally towards the closed position. As the slide **54** slides distally along the slide rail **58**, the new cartridge is positioned or loaded into the chamber **52**. When the slide **54** reaches the closed position, the slide arm **56** is located at the distal end of the slide rail **58**. The slide **54** may be biased towards the closed position such that the slide **54** automatically slides distally to load the new cartridge and to close the chamber **52**.

Referring now to FIG. **5**, the forearm **36** includes rail portions **23** that extend from the forearm **36** such that each of the rail portions **23** extends above the centerline of the barrel **60**. Each of the rail portions **23** defines a rail interface system **92** (FIG. **1**) that is monolithically formed with the tactical chassis **20** such that the tactical chassis **20** is configured to receive accessories as detailed below. Additionally or alternatively, a lower surface of the forearm **36** may define a lower rail interface system **94** configured to receive accessories. For example, the lower rail interface system **94** may receive a bipod **98** (FIG. **1**). In addition, the lower rail interface system **94** may receive a foregrip (not shown)

As shown, the rail interface system **92** and the lower rail interface system **94** are M-LOK® rail systems, which is a rail system that is commonly known in the art and is shaped to receive M-LOK® accessories. It is also contemplated that other rail systems that are commonly known in the art may be monolithically formed in the rail portions **23** and lower portion of the forearm **36** of the tactical chassis **20** including, but not limited to, a Picitinny rail system, a KeyMod rail system, or other rail systems as will be familiar to the skilled practitioner.

Referring back to FIGS. **1-3**, the modular rifle system **10** includes a pistol grip **80** that protrudes conspicuously below the action **50** of the rifle **10** to allow for a pistol style grasp in which the web of the trigger hand (between the thumb and index finger) can be placed below the top exposed portion of the trigger mechanism **40** while firing. The pistol grip **80** includes an upper portion **84** that forms an elliptical shape such that the web of the firing hand can rest comfortably below the top exposed portion of the trigger mechanism **40** and a lower portion **86** that extends proximally and downward to form an acute angle with respect to the proximal portion **21** of the tactical chassis **20**. It is contemplated that the upper portion **84** of the pistol grip **80** may form different shapes to receive the web of the firing hand and that the lower portion **86** of the pistol grip **80** may protrude from the chassis **20** at any angle to allow for a pistol style grasp.

The pistol grip **80** has a proximal side **88** that is contoured to receive a palm of a firing hand. It is contemplated that the contour of the proximal side **88** may take on any shape to comfortably receive the palm of the user's hand. The pistol grip **80** has a distal side **89** that contains ridges to receive non-trigger fingers of a firing hand of an end user. It is contemplated that the ridges may take on any shape or depth to comfortably receive the non-trigger fingers. It is also contemplated that the distal side **89** of the pistol grip **80** may be smooth. The distal side **89** may include an upper end portion **87** that is contoured to sit flush with a radius of a trigger guard **42** of the trigger mechanism **40**. The pistol grip **80** is secured to the tactical chassis **20** by a fastener **82** (FIG. **9**) that passes through the upper end portion **87**.

Referring now to FIGS. **8** and **9**, a ridgeline grip **180** is provided in accordance with the present disclosure. The ridgeline grip **180** is secured to a lower surface **18** of the proximal portion **21** of the tactical chassis **20** by a fastener **82** (FIG. **9**). The ridgeline grip **180** includes a connecting surface **185** that is secured to the tactical chassis **20** with the fastener **82** such that the connecting surface **185** of the ridgeline grip **180** is flush with the lower surface **18** of the tactical chassis **20**. When the ridgeline grip **180** is secured to the tactical chassis **20**, the ridgeline grip **180** extends from the trigger guard **42** of the trigger mechanism **40** to a proximal well **27** of the proximal portion **21** of the tactical chassis **20**.

The connecting surface **185** of the ridgeline grip **180** forms a corner with a proximal well wall **181** that descends a short distance to an exposed upper surface **182** of the ridgeline grip **180**. The upper surface **182** of the ridgeline grip **180** extends proximally from the proximal well wall **181** beyond a proximal end of the proximal portion **21** of the tactical chassis **20** such that a portion of the upper surface **182** opposes the stock **12**. As shown, a proximal tip **183** of the ridgeline grip **180** forms an angled surface **184** between the exposed upper surface **182** and a back edge **186** of the ridgeline grip **180**. The backside wall **186** extends from the angled surface **184** to a lower tip **189** of the ridgeline grip **180**. The angled surface **184** and the back edge **186** of the ridgeline grip **180** may meet at a variety of angles. The angled surface **184** may be a smooth curve or a plurality of surfaces to form polygonal shape when viewed from the side between the exposed upper surface **182** and the back edge **186**.

The ridged face **188** of the ridgeline grip **180** extends from the lower tip **189** to a distal strut **187** of the ridgeline grip **180**. The ridged face **188** of the ridgeline grip includes distinct ridges **190** to receive non-trigger fingers of a firing hand. As shown, the ridges **190** are radial in shape; however, it is contemplated that the ridges **190** may take on any shape or depth to comfortably receive non-trigger fingers. The distal strut **187** of the ridgeline grip **180** is contoured to sit flush with the trigger guard **42** of the trigger mechanism **40** such that the distal strut **187** flushingly receives the trigger guard **42**.

The ridgeline grip **180** protrudes slightly below the trigger guard **42** of the modular rifle system **10** to allow for a rifle style grasp in which the web of the trigger hand can be placed above, or at the same level as, the top exposed portion of the trigger mechanism **40** during firing. The ridgeline grip **180** extends below the action to a lesser extent than the pistol grip **80** (FIG. **1**) and does not allow for a pistol style grasp.

With particular reference to FIG. **9**, the ridgeline grip **180** is secured to the tactical chassis **20** by the fastener **82**. The fastener **82** passes through the distal strut **187** of the ridgeline grip **180** to secure the ridgeline grip **180** to the proximal portion **21** of the tactical chassis **20**.

It is contemplated that a tactical chassis (e.g., tactical chassis **20**) and grip (e.g., pistol grip **80** or ridgeline grip **180**) may be constructed from the same material or made from different materials. Contemplated materials for the chassis and grips include, but are not limited to, natural materials (e.g. wood), man-made materials (e.g., Kevlar), composite materials (e.g., carbon fiber), metals, metal alloys, synthetic materials, laminated materials, compressed woven materials, and any combination thereof.

With reference to FIGS. **10** and **11**, another firearm **200** is provided in accordance with the present disclosure which includes a stock **210**, a lower chassis **220**, an upper carrier **260**, an upper forend **270**, an action **283**, a magazine **285**, a grip **287**, a barrel **290**, and a break **292** secured to the barrel **290**.

Referring to FIGS. **12-16**, the lower chassis **220** includes, from a proximal end to a distal end, a stock mount **212**, a lower receiver **230**, and a lower forend **240**. The entire lower chassis **220** is monolithically formed which may form a stable platform for components of a rifle system. Forming a stable platform may improve the accuracy and/or precision of a firearm, e.g., firearm **200** (FIG. **10**), built on the lower chassis **220**. In addition, by having the lower receiver **230** monolithically formed in the lower chassis **220**, the lower chassis **220** may be considered a registered firearm.

The stock mount **212** defines a distal portion of the lower chassis **220** and is substantially circular in shape. The stock mount **212** is configured to secure a stock, e.g., stock **210** (FIG. **10**), to the lower chassis **220**. An inner surface **213** of the stock mount **212** may be threaded such that a stock may be threaded into the stock mount **212**. In some embodiments, a bugger tube (not shown) passes through the stock mount **212**. In some embodiments, the stock mount **212** is separate from the lower chassis **220** and is secured to the lower chassis **220** by one or more fasteners or a fastening system (not shown). In certain embodiments, the stock mount **212** is monolithically formed, integrally formed, or secured to the upper carrier **260** (FIG. **10**).

With particular reference to FIG. **16**, the lower receiver **230** includes a trigger well **232**, a magazine well **234**, and a grip mount **236**. The trigger well **232** is configured to at least partially receive an action, e.g., action **283** (FIG. **11**). The action **283** may be any suitable action. For example, the action **283** may be rimfire or center fire, may be semi-automatic or fully automatic, and may be a variety of calibers, e.g., .17, .17-223, .20, .204, .220, .222, .223, .22, .224, .243, .25, .270, .277, .30, .300, .30-06, .308, .338, .358, .375, .45, .500, 5.45, 5.56, 6 mm, 6.5 mm, 7 mm, 20 Gauge, 12 Gauge, .410, etc. In some embodiments, the lower

receiver **230** is an AR-15, AR-10, or a clone equivalent or modified clone equivalent thereof.

The magazine well **234** is configured to receive a magazine, e.g., magazine **285** (FIG. **11**), that may be fixed to or removable from the lower receiver **230** and configured to hold one or more cartridges of suitable ammunition for the action **283** received in the trigger well **232**. As shown, the magazine well **234** is positioned distal of the trigger well **232**; however, the magazine well **234** may be positioned proximal of the trigger well **232**. The magazine well **44** is configured to feed cartridges into a chamber as detailed below.

The grip mount **236** is configured to secure a grip, e.g., grip **287** (FIG. **11**) to the lower receiver **230**. The grip may be any suitable grip, e.g., a pistol grip or a ridgeline grip. In some embodiments, no grip is secured to the grip mount **236**.

The lower receiver **230** may also include openings **238** that are configured to receive fasteners to secure components, e.g., a magazine, an action, or a grip, to the lower receiver **230**. The lower chassis **220** may also include openings **222** that are configured to receive fasteners to secure the upper carrier **260** and/or the upper forend **270** to the lower chassis **220**.

The lower forend **240** of the lower chassis **220** is substantially U-shaped in lateral cross-section to define a channel **242** therein. The channel **242** is configured to receive a barrel, e.g., barrel **290** (FIG. **11**). The lower forend **240** has one or more flat surfaces **244***a*, **244***b*, **244***c* (FIGS. **14** and **15**) that may include mounting systems such as rails integrally formed thereon. For example, the lower surface **244***b* of the lower forend **240** includes a lower rail **245** that is configured to mount one more accessories, e.g., a strap, bipod, tripod, light, laser sight, etc., to the lower chassis **220**. The lower rail **245** extends longitudinally along the lower surface **244***b* such that the one or more accessories to be mounted in a plurality positions longitudinally spaced apart from one another along the lower rail **245**. In some embodiments, the lower rail **245** is monolithically formed in the lower surface **244***b* of the lower forend **240**. Alternately, the lower rail **245** may be secured to the lower surface **244***b* by one or more fasteners.

The lower forend **240** extends distally from the magazine well **234**. As shown, the lower forend **240** is monolithically formed with the lower receiver **230**. In some embodiments, the lower forend **240** may be formed of one or more components. For example, the lower forend **240** may have a proximal portion that is monolithically formed with the lower receiver **230** and extends distally from the magazine well **234** and is then secured to a distal portion of the lower forend **240** by one or more fasteners. The proximal portion of the lower forend **240** may extend distally in a range of about 0.5 inches to about 28 inches from the magazine well **234**. Extending the lower forend **240** has shown to increase the precision and accuracy of firearms based on a chassis with a monolithically formed lower forend **240**.

With particular reference to FIGS. **17-19**, the upper forend **270** is configured to integrally join with the lower chassis **220** over the lower forend **240**. The upper forend **270** has a pair of proximal legs **274** and a pair of distal legs **276** which are each laterally spaced apart to define an upper channel **272** therebetween. The pair of proximal legs **274** and the pair of distal legs **276** are longitudinally spaced apart from one another along the upper channel **272**. Each of the proximal legs **274** and distal legs **276** may include a lower mounting surface **275**, **277** that is secured to the lower forend **240**. The lower mounting surfaces **275**, **277** may receive a fastener to secure each of the proximal and distal legs **274**, **276** to the lower forend **240**. In some embodiments, the each of the lower mounting surfaces **275**, **277** include a portion of a fastening system, e.g., a portion of a slide lock, that interfaces with another portion of the fastening system on the lower forend **240** to secure the upper forend **270** with the lower forend **240** of the lower chassis **220**. In some embodiments, the lower mounting surfaces **275**, **277** are welded to the lower forend **240**.

In embodiments, the upper forend **270** is monolithically formed with the lower forend **240** of the lower chassis **220**. When the upper forend **270** is monolithically formed with the lower forend **240**, the proximal and distal legs **274**, **276** may not extend into the lower forend **240** and be formed with the lower forend **240** along a center line of the channel **242**.

The upper channel **272** may form a portion of the channel **242** and receive a portion of a barrel, e.g., barrel **290** (FIG. **10**). The upper forend **270** may include a top rail **279** that extends along a length of an upper surface thereof. The top rail **279** may extend along a substantial or entire length of the upper surface of the upper forend **270**. The proximal legs **274** may include angled surfaces which include an angled rail **278**. The angled rail **278** extends in a direction parallel to a longitudinal axis of the upper channel **272** and is radially offset to the top rail **279** at an angle in a range of about 15 degrees to about 90 degrees about the longitudinal axis of the upper channel **272**. As shown in FIG. **18**, the angled rail **278** is offset about 30 degrees from the top rail **279**. The upper forend **270** may include an angled rail **278** on one or both of the proximal legs **274**. In some embodiments, the upper forend **70** is provided without an angled rail **278**. In other embodiments, the upper forend **70** includes an angled rail **278** on each of the proximal and distal legs **272**, **274**. In certain embodiments, the upper forend **270** includes an angled rail **278** that is continuous from a proximal leg **274** to a distal leg **276**. In particular embodiments, one or more of the proximal legs **274** includes an angled rail **278** offset at a first angle, e.g., about 45 degrees, and one or more of the distal legs **276** includes an angled rail **278** offset at a second angle, e.g., about 90 degrees, that is different from the first angle.

With additional reference to FIGS. **20-24**, the lower chassis **220**, the upper carrier **260**, and the upper forend **270** form a body **218** for a firearm, e.g., firearm **200** (FIG. **10**). The lower chassis **220** and the upper forend **270** may be monolithically or integrally formed with one another. In some embodiments, the upper carrier **260** and the upper forend **270** are monolithically or integrally formed with one another. In embodiments, the lower chassis **220**, the upper carrier **260**, and the upper forend **270** are monolithically or integrally formed with one another.

With particular reference to FIG. **24**, the upper carrier **260** secures over the trigger well **232** and the magazine well **234** of the lower chassis **220**. The upper carrier **260** may partially receive a portion of an action therein, e.g., action **283** (FIG. **11**). For example, as shown in FIG. **11**, a bolt carrier **280** may be received within the upper carrier **260**. The upper carrier **260** may be secured to the lower receiver **230** of the lower chassis **220** by one or more fasteners passing through legs or tabs **262** of the upper carrier **260**. The upper carrier **260** may also include an upper rail **264** that extends along an upper surface of the upper carrier **260**. The upper rail **264** may form a continuous rail with the top rail **279** of the upper forend **270**. While not shown, the upper carrier **260** may include one more angled rails similar to the angled rails **278** detailed above.

The body **218** may include a plurality of rails as detailed individually above. For example, the lower chassis **220** may include the lower rail **245**, the upper carrier **260** may include an upper rail **264**, and the upper forend **270** may include one or more angled rails **278** and an upper rail **279**. The rails **245**, **264**, **278**, **279** may be used to mount one or more accessories to the firearm **200**, e.g., light **292** or scope **294** (FIG. **10**). The upper rails **264**, **279** may form a single continuous rail with a portion of a single accessory being mounted or secured to each of the upper rails **264**, **279**.

With reference to FIGS. **25** and **26**, another firearm **300** is provided in accordance with the present disclosure. The firearm **300** includes several components that are similar to the components of firearm **200** detailed above with similar components having similar labels with a "3" replacing the "2" of the previous label, e.g., the upper carrier **360** of firearm **300** is similar to the upper carrier **260** of firearm **200**. For reasons of brevity only the differences between firearm **300** and firearm **200** will be detailed below.

The firearm **300** includes a lower chassis **320** monolithically formed with an upper forend **370** which define a channel **342** therebetween to receive a barrel **390**. The upper carrier **360** is secured to the lower chassis **320** by fasteners passed through tabs **362** as shown in FIG. **25**. An action **383** is disposed within a trigger well **333** of a lower receiver **330** of the lower chassis **320** before the upper carrier **360** is secured thereto. The fire arm **300** also includes a magazine **385**, a pistol grip **387**, and a stock **310**.

The components for firearms, e.g., firearms **200**, **300** detailed above, e.g., lower chassis **220**, **320**, may be used with a variety of firearms including, but not limited to, bolt action firearms, shotguns, semi-automatic firearms, pistols, or fully automatic firearms.

While several embodiments of the disclosure have been shown in the drawings, it is not intended that the disclosure be limited thereto, as it is intended that the disclosure be as broad in scope as the art will allow and that the specification be read likewise. Any combination of the above embodiments is also envisioned and is within the scope of the appended claims. Therefore, the above description should not be construed as limiting, but merely as exemplifications of particular embodiments. Those skilled in the art will envision other modifications within the scope of the claims appended hereto.

What is claimed:

1. A chassis of a registered, semi-automatic firearm, the chassis comprising:

a lower receiver defining a trigger well configured to receive an action; and

a lower forend extending distally from and monolithically formed with the lower receiver, the lower forend defining a channel configured to receive a barrel, wherein the lower forend is configured to be spaced from the barrel to define an annular gap between the lower forend and the barrel, the annular gap extending along the length of the lower forend.

2. The chassis according to claim **1**, further comprising a lower rail secured to a lower surface of the lower forend, the lower surface opposite the channel.

3. The chassis according to claim **2**, wherein the lower rail is monolithically formed with the lower forend.

4. The chassis according to claim **2**, wherein the lower rail extends longitudinally along the lower surface of the lower forend and is configured to secure an accessory to the lower forend in a plurality of longitudinal positions.

5. The chassis according to claim **1**, further comprising an upper forend secured to the lower forend, a portion of the channel defined between the upper and lower forends.

6. The chassis according to claim **5**, further comprising an upper rail disposed on an upper surface of the upper forend opposite the channel.

7. The chassis according to claim **6**, wherein the upper rail is monolithically formed with the upper forend.

8. The chassis according to claim **5**, wherein the upper forend is monolithically formed with the lower forend.

9. The chassis according to claim **1**, further comprising a stock mount secured to the lower receiver, the stock mount configured to secure a stock to the lower receiver.

10. The chassis according to claim **9**, wherein the stock mount is monolithically formed with the lower receiver.

11. The chassis according to claim **5**, further comprising an upper carriage secured to the lower receiver.

12. The chassis according to claim **11**, wherein the upper carriage is monolithically formed with the upper forend.

13. The chassis according to claim **1**, wherein the lower receiver defines a magazine well configured to receive a magazine containing one or more cartridges suitable for the action.

14. The chassis according to claim **13**, wherein the lower forend extends distally from the magazine well.

15. A registered, semi-automatic firearm comprising:

a lower chassis including:

a lower receiver defining a trigger well; and

a lower forend extending distally from and monolithically formed with the lower receiver, the lower forend defining a channel;

an action received within the trigger well; and

a barrel received within the channel, wherein the barrel is spaced radially inward from the lower forend along the length of the lower forend.

16. The firearm according to claim **15**, further comprising a lower rail monolithically formed on a lower surface of the lower forend, the lower surface opposite the channel.

17. The firearm according to claim **15**, further comprising an upper forend secured to the lower forend, a portion of the channel defined between the upper and lower forends, wherein the barrel is spaced radially inward from the lower and upper forends to define an annular gap that extends along the entire length of the lower and upper forends.

18. The firearm according to claim **15**, further comprising a stock secured to and extending proximally from the lower chassis.

19. The firearm according to claim **15**, further comprising an upper carriage secured to the lower receiver.

20. A registered, semi-automatic firearm comprising:

a lower chassis including:

a lower receiver defining a trigger well and a magazine well; and

a lower forend extending distally and monolithically formed with the lower receiver;

an upper forend secured to the lower forend with a channel being defined between the upper and lower forends;

an upper carriage secured to the lower receiver over the trigger well to define a chamber;

a stock secured to and extending proximally from the lower receiver;

an action received within the trigger well; and

a barrel received within the channel, wherein the barrel is spaced radially inward from the lower and upper

forends to define an annular gap that extends along the length of the lower and upper forends.

* * * * *